INSTALLATION GUIDE

RESYSTA DECO SIDING SYSTEM

1. Introduction

Resysta is an extremely durable, timber look-alike, decking material. It is resistant to damage from the sun, rain, frost and even salt water. Unlike wood, it requires minimal maintenance and is highly resistant to pests, mould and cracks. Unlike other composite materials, it closely resembles the look and feel of natural wood, with a smooth surface finish. Resysta meets most of the future environmentally sustainable material requirements concerning recycled and fully recyclable materials. Resysta is used for its architectural aesthetic, and not for structural support.

SECTION 1 Material Components

A combination of these three basic raw materials makes up the simple components that create Resysta. This innovative material offers designers and architects new creative horizons to utilise its compelling and unique appearance.

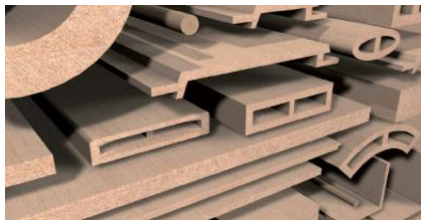

Approx. 60% RICE HUSK + Approx. 22% COMMON SALT + Approx. 18% MINERAL OIL = RESYSTA

SECTION 2 Basics

OVERVIEW OF PARTS

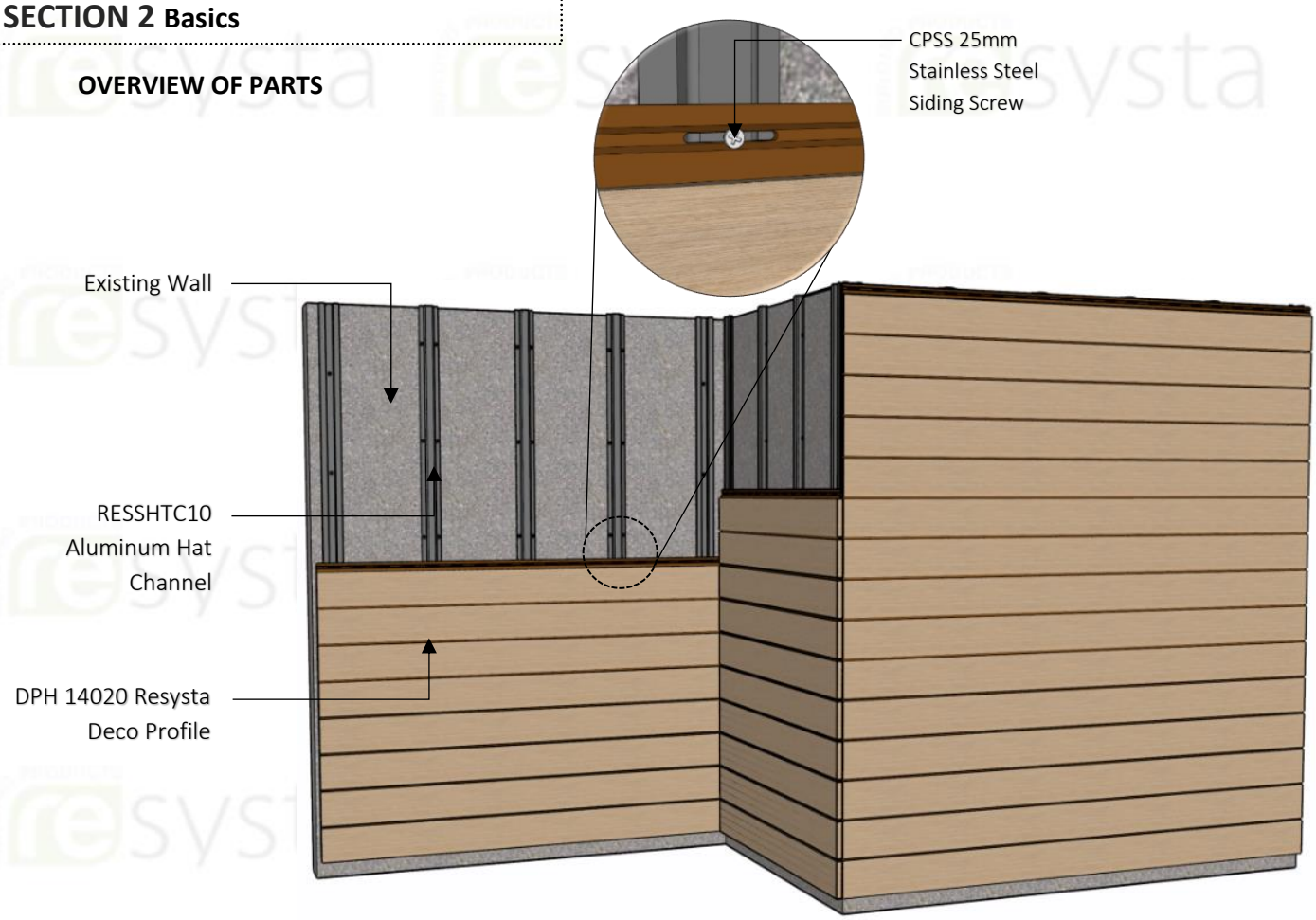

ISOMETRIC VIEW

BASIC PARTS OF SIDING BOARD

SECTION 3 Scope of Delivery

NO.	PRODUCT NAME AND SPECIFICATION	ISOMETRIC VIEW	FRONT VIEW
1	**DPH 14020** 70mm x 20mm x 2900mm Deco Profile		
2	**DPCRBB 2020** 38mm x 38mm x 2900mm Deco Corner Profile		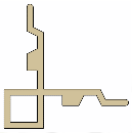
3	**RESSHTC10** 20mm x 38mm Siding Hat Channel Mill Finish	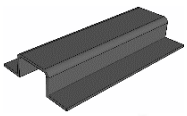	
4	**RESSHTC10P** 20mm x 38mm Siding Hat Channel Punched Mill Finish	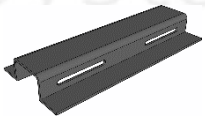	
5	**RESSJS10** Starter J-Strip	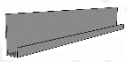	
6	**CPSS 25** 25mm Shoulder Stainless Steel Siding Screw		

Table 1.1 "Scope of Delivery"

NOTE: Table above shows products commonly used for wall siding. To view a complete list of products, please refer to our Resysta brochure or visit our web site *www.resysta-asia.com*

IMPORTANT: Four Major Bullet Points You Must Follow for a Successful Resysta Siding Installation

- **Screw Placement**
- **Room for Expansion and Contraction**
- **Hard Fastening of each Plank**
- **Top to Bottom Ventilation**

NOTE:

Proper planning of the siding layout is essential for ease of installation of siding boards and siding components. Thoroughly read the following siding assembly instructions and obtain all necessary building permits prior to starting your installation. Decide finishing and trimming options prior to starting the project to ensure siding finishing detail is uniform for all sides of the building. Installation is the sole responsibility of the installer. Resysta Company assumes no responsibility whatsoever with respect to the installation. The information contained herein is provided for guidance purposes only and should not be relied upon as any absolute representation by Resysta.

Safety Tips:

1. Always check for power, gas, and water lines before installing.
2. Always wear safety glasses when operating power equipment.

Assembly Tips:

1. Battens should be flat and level to each other. Siding will follow the contour of the wall.
2. Resysta siding system is not a rain screen or water proof system. Resysta siding is a water shed system.
3. Proper wall preparation according to local building codes and wall covering manufacture's recommendations should be adhered to. This includes but is not limited to flashing all openings.
4. All holes should be predrilled and installation holes should be slotted.
5. Only use construction fastening material and hardware suitable for outdoor use (e.g. stainless steel screws). Recommended is the use of shoulder screw.
6. Always consider the linear expansion of Resysta, which is dependent on the temperature but not the air humidity. See Table 1.4 "Resysta Expansion" for more information.
7. Cut-off pieces and/or abrasive dust must be disposed of separately. Please comply with regulations of your competent waste management. You may under no circumstances burn Resysta material.
8. Cutting to length should be carried out at consistent material temperature. Therefore, the material should be stored in the shade or in areas where it is not exposed to direct sunlight. The material can warm up considerably in the sun, leading to an increased change in length. In the case of more distinct fluctuations in material temperature, cutting to length may have to be adapted accordingly.
9. Please store Resysta products flat on level surface.

Code Compliant Batten Spacing

Part Number	Part Description	Batten Span (mm)	Minimum Steel Gage Size
DPH 14020	Siding Board Flat 20mm X 140mm	400mm	18

Table 1.2 "Batten Spacing Requirements"

Recommendation for Batten Spacing

If the siding is being installed in a hot southern location and will be exposed to direct sunlight for the majority of each day and/or the siding will be stained a dark color, the batten spacing is suggested be reduced to 200mm or 300mm center-to-center for all siding profiles.

Expansion / Contraction of Siding

Resysta Expansion – Contraction Guide	
Profile Length	**2900mm**
Expansion / Contraction amount (approx.. 0.3% over 90°C variation in temperature)	10mm

<u>Table 1.3 Expansion – Contraction:</u> Average expected expansion – contraction (this can vary based on geographical region).

Resysta Siding Board Gap Guide					
	Gap of Siding Boards				**H-Channel Gap**
Temperature at Installation	**Below 0 °C**	**15 °C**	**20 °C**	**30 °C**	
Amount for Siding Profile Length of 2900mm	10mm	7mm	3mm	0mm	6mm

<u>Table 1.4 "Resysta Expansion"</u> – Ensure a steady material temperature when cutting the boards to size, i.e. the cutting has to be done under constant conditions, e.g. inside or in shade.

Always consider linear expansion of Resysta profiles during the installation of siding products. If temperatures fluctuate during the installation, the gaps placed between the ends of the boards and a corner, window, or door must change with the temperature. Use the guide above to gap boards during installation.

Expansion – Contraction Tips:

1) Control Piece

   at the start of the day cut a length of board that is desired to be installed and keep this board in the same area as the cutting and storage of the remaining boards. This board will be a "Control Piece" to reference when cutting other boards to be installed. Throughout the day the "Control Piece" can be referenced and the saw cuts adjusted accordingly as the boards expand and/or contract. Heat from the sun will cause Resysta boards to expand so if the material is stored in the shade keep the "Control Piece" in the shade as well.

Example:

   If 2900mm boards are being installed put aside one 2900mm board at the start of the day. Reference these boards throughout the day and adjust the cutting of the other boards to match

2) Control Gap

   at the start of the installation place the siding gap according to Table 1.4 and mark the first gap made. This gap will be a "Control Gap" to reference when gapping the remaining boards to be installed. Throughout the installation reference back to this "Control Gap" to match the other gaps being installed. This will ensure that all the gaps installed are the same.

SECTION 1 – Batten Substructure

General Notes on Batten Substructure

Resysta Deco boards can be installed in horizontal or vertical applications and the batten substructure should be planned to accommodate how the siding boards will be installed.

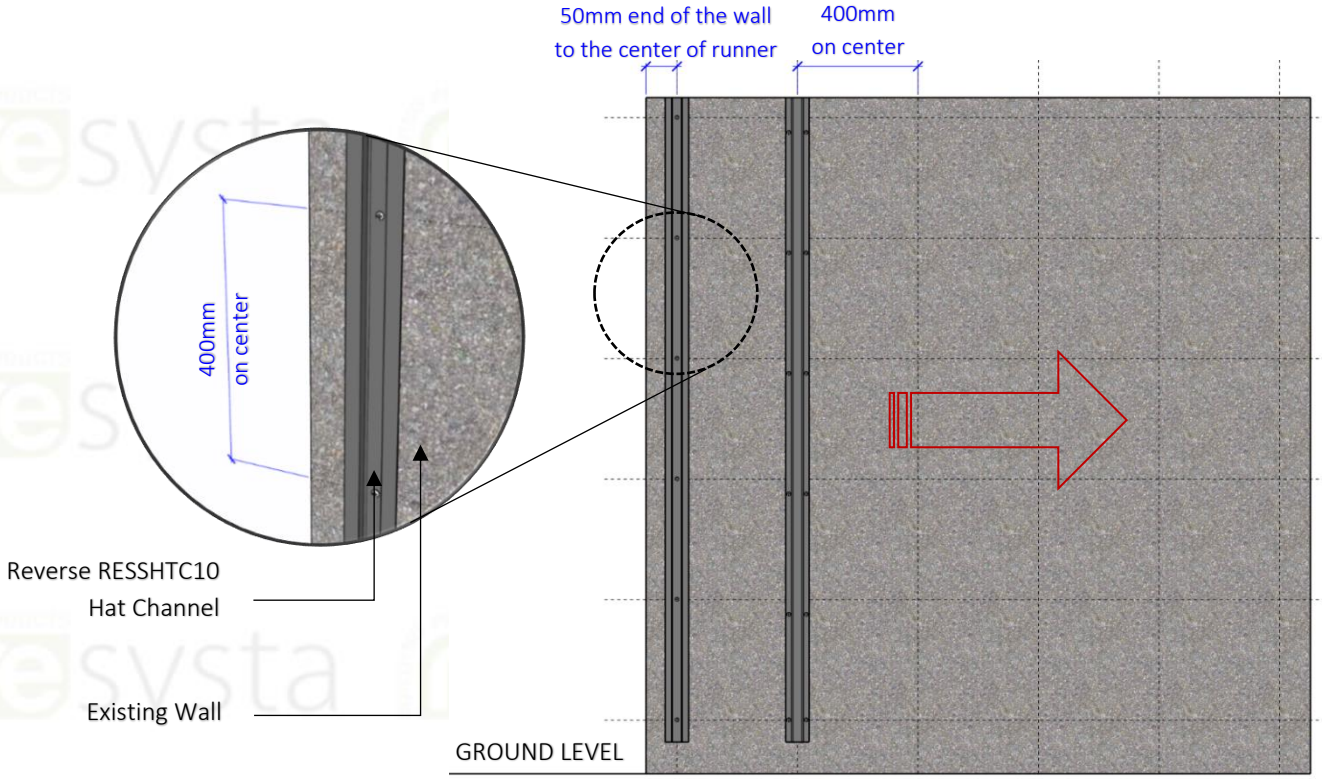

FRONT ELEVATION

HORIZONTAL SIDING / VERTICAL BATTENS

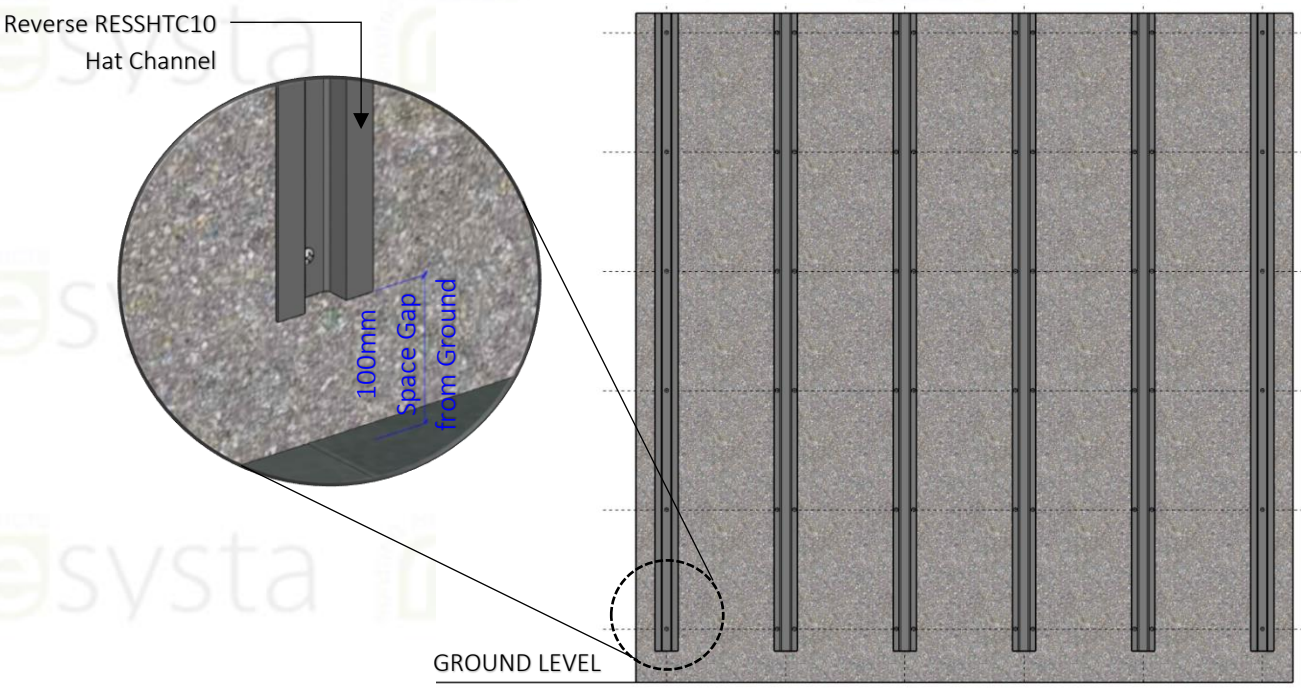

FRONT ELEVATION

HORIZONTAL SIDING / VERTICAL BATTENS

Note:
For Vertical Siding Installation a Perforated Hat Channel must be used to allow airflow and drainage of water.

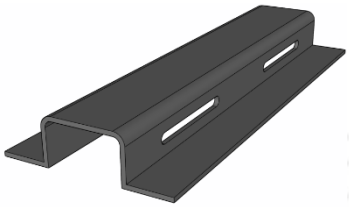

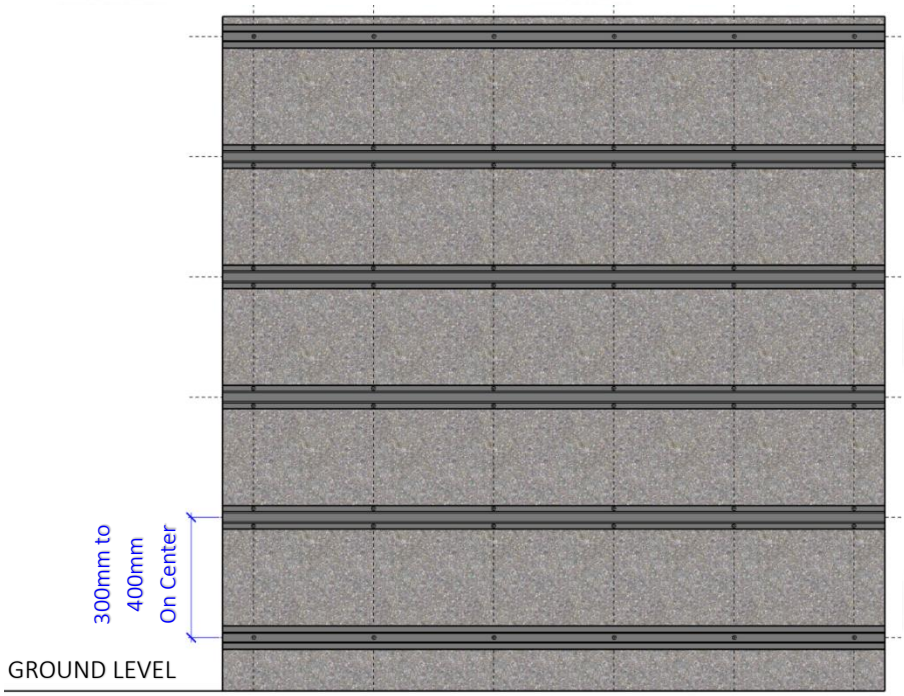

FRONT ELEVATION
VERTICAL SIDING / HORIZONTAL BATTENS

Resysta siding boards require a minimum of 75mm from the ground to the start of the siding board in horizontal installations. Plan the batten substructure and wall assembly accordingly to accommodate siding installation while adhering with local building code requirements.

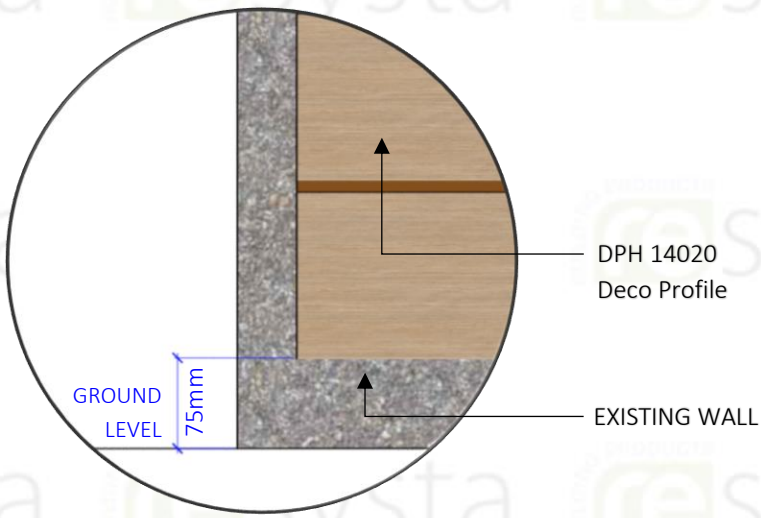

DETAIL
BATTENS DETAIL

Resysta Aluminum Batten Substructure

Install the battens and secure to the frame substructure in compliance with local building codes. Ensure that the installed battens do not exceed the "Batten Spacing Requirements" of Table 1.2. On walls where two siding boards will be used end-to-end, a minimum of two battens must be used to accommodate the fastening of the siding boards and any trim pieces desired to the batten substructure where the boards meet. Prior to installing the Resysta siding boards, ensure that the batten installation provides a minimum 20mm air gap behind the siding boards and there is sufficient support for all siding boards and trim accessories. This is often achieved through the installation of battens with a minimum thickness of 20mm.

Battens should be installed on top of a code compliant sheathing with fasteners and fastener spacing sufficient to accommodate all loads imposed upon it by the Resysta siding board, trim components, and any other accessories attached to the battens. Resysta siding boards must be attached to aluminum battens with Resysta Shoulder stainless steel screws taking care to not penetrate the weather barrier. If the weather barrier is going to be penetrated reference the weather barrier manufacture's recommendations.

Notes on Resysta Shoulder Screw

Resysta Aluminum Batten Installation Guidelines

When using metal battens, either steel or aluminum, it is recommended to use the Screw which can be driven through the aluminum siding trim and into the metal batten. Trim should be fastened 400mm on center for either horizontal or vertical installations. If the batten substructure spacing is reduced for the siding boards the trim should be fastened at the same interval as the siding. Be aware of fastener placement for the siding trim so as to not hinder the installation of the Resysta siding boards.

SECTION 2 – Horizontal Siding Applications

STEP 2.1

Pre apply all finishing trim accessories such as trim around corners, windows, and doors according to the pre plan layout and following the manufacture's recommendations. Ensure that all trim is level and square. Battens should be installed vertically.

STEP 2.2

Aluminum starter strip is required to install the Resysta siding board. Attach the starter strip at the bottom of the battens following the fastener and spacing recommendations in Section 1. The Resysta siding boards will hang 13mm below the bottom of the starter strip therefore the starter strip should be attached accordingly as per the pre plan layout.

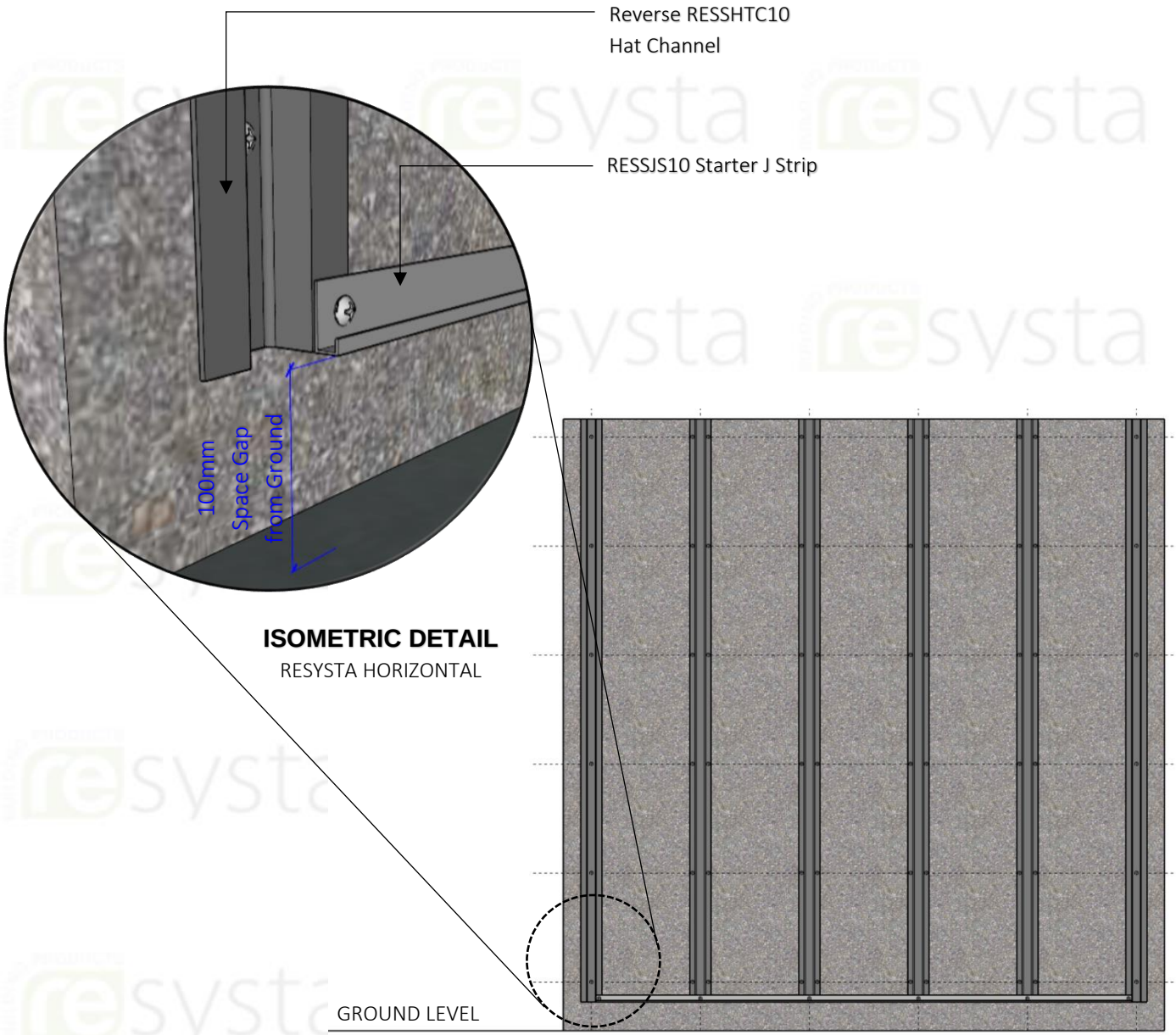

ISOMETRIC DETAIL
RESYSTA HORIZONTAL

FRONT ELEVATION
RESYSTA HORIZONTAL SIDING BOARD

STEP 2.3

Hook the groove end of the first siding board into the Starter J Strip.

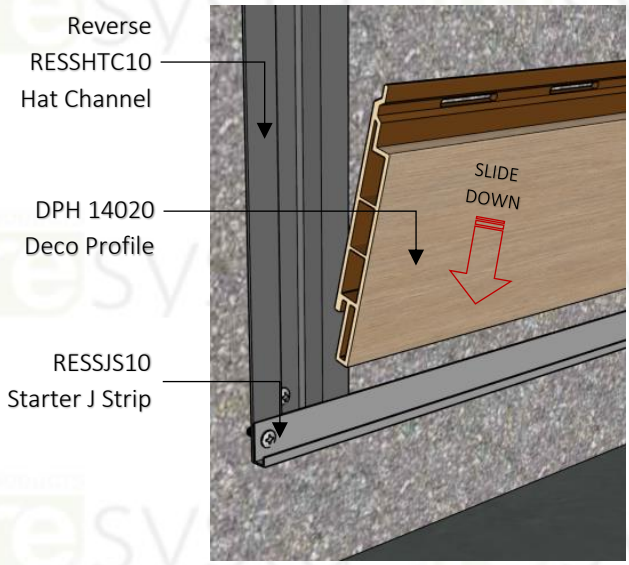

DETAIL

RESYSTA HORIZONTAL SIDING

Step 1

Slide down the first Resysta Siding board into Starter J Strip.

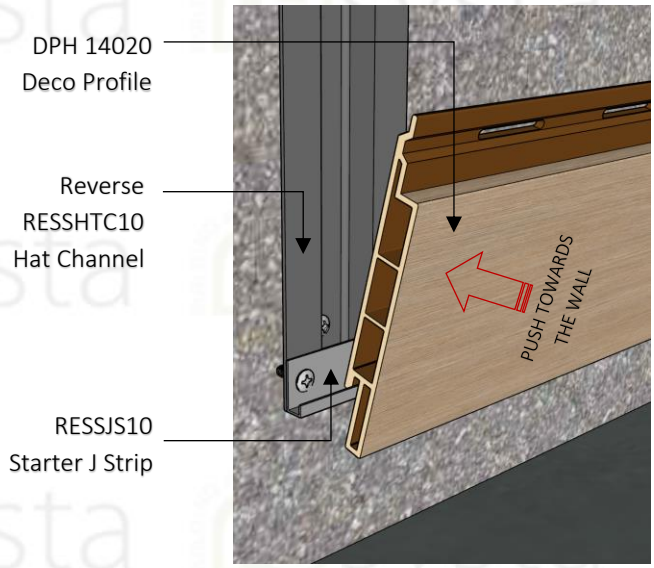

DETAIL

RESYSTA HORIZONTAL SIDING

Step 2

Hook the groove end of the first Resysta Siding board into the Starter J Strip with SS screw.

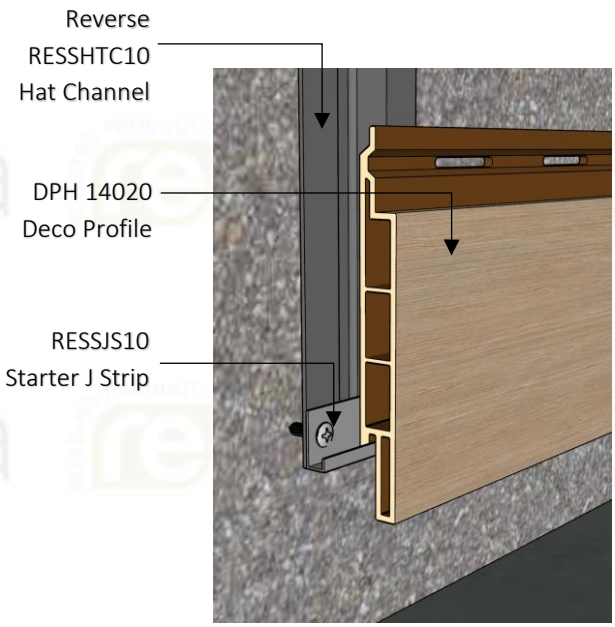

DETAIL

RESYSTA HORIZONTAL SIDING

Step 3

Push the Resysta Siding board perpendicular into the runner and screw direct to the groove.

STEP 2.4

Install screws into all slotted holes except the center hole. DO NOT over tighten the screws. The screws should be placed in the center of the slotted hole and loose enough to allow the board to move freely from side to side to allow for expansion and contraction.

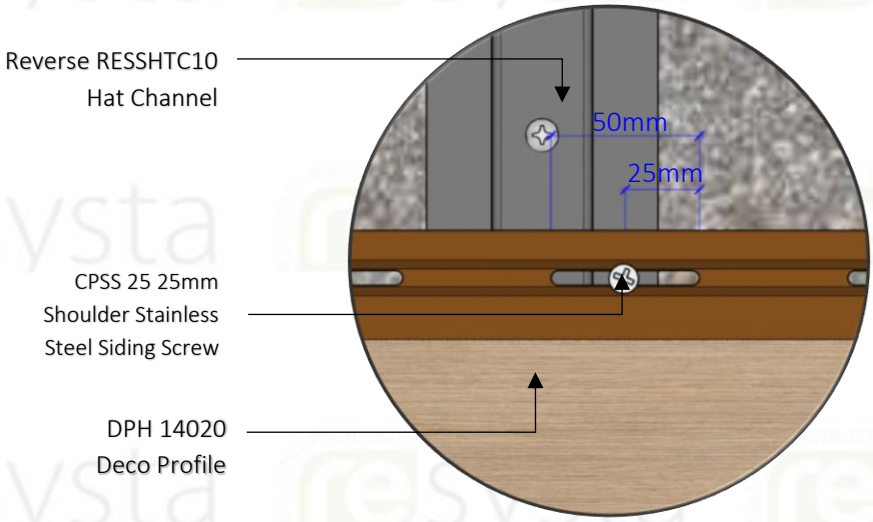

FRONT DETAIL

RESYSTA HORIZONTAL SIDING BOARD

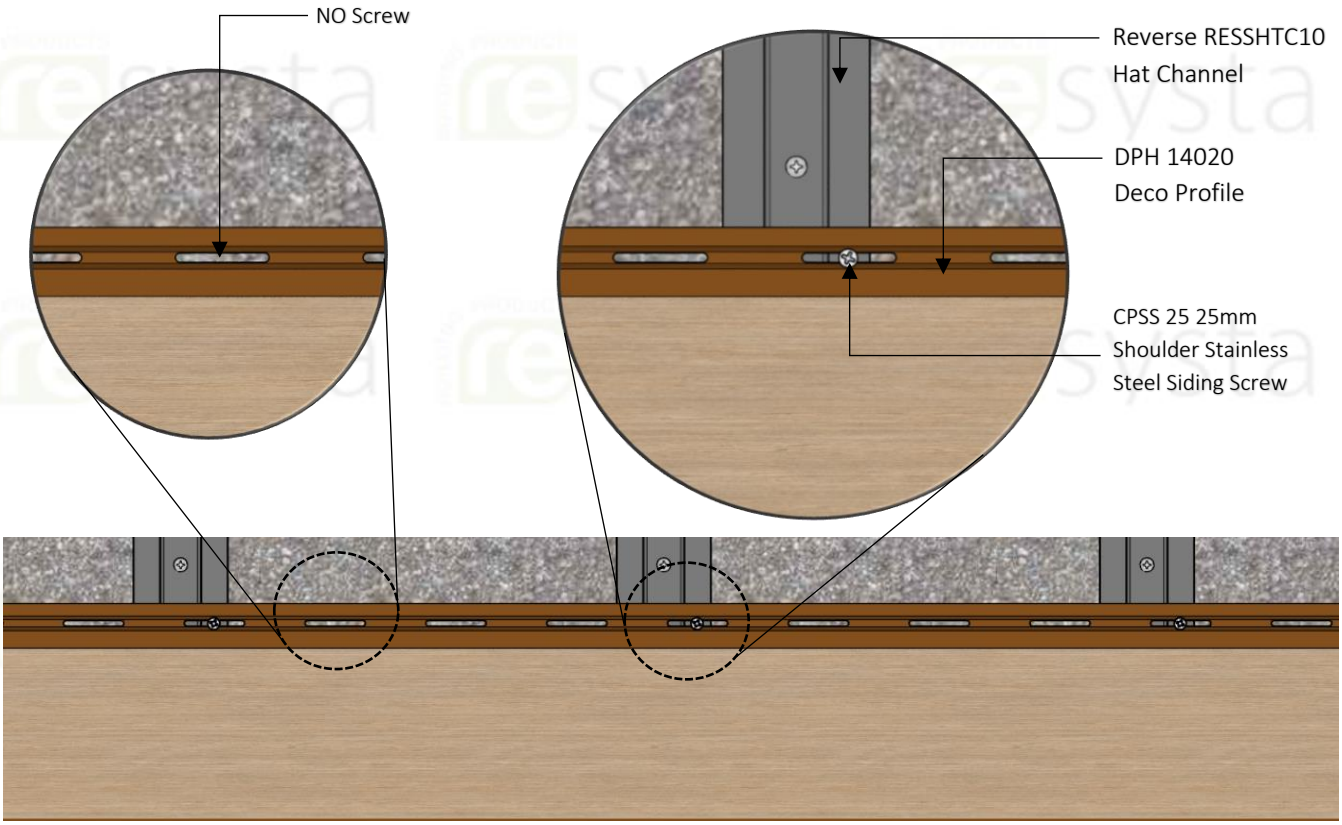

FRONT ELEVATION

RESYSTA HORIZONTAL SIDING

Note

If installing more than one board in width, please refer to Section 3 – Horizontal Multi Board Siding Applications

STEP 2.5

Install the final two screw in the slotted hole in the center of the board. This will allow for expansion and contraction evenly to each side of the assembly.

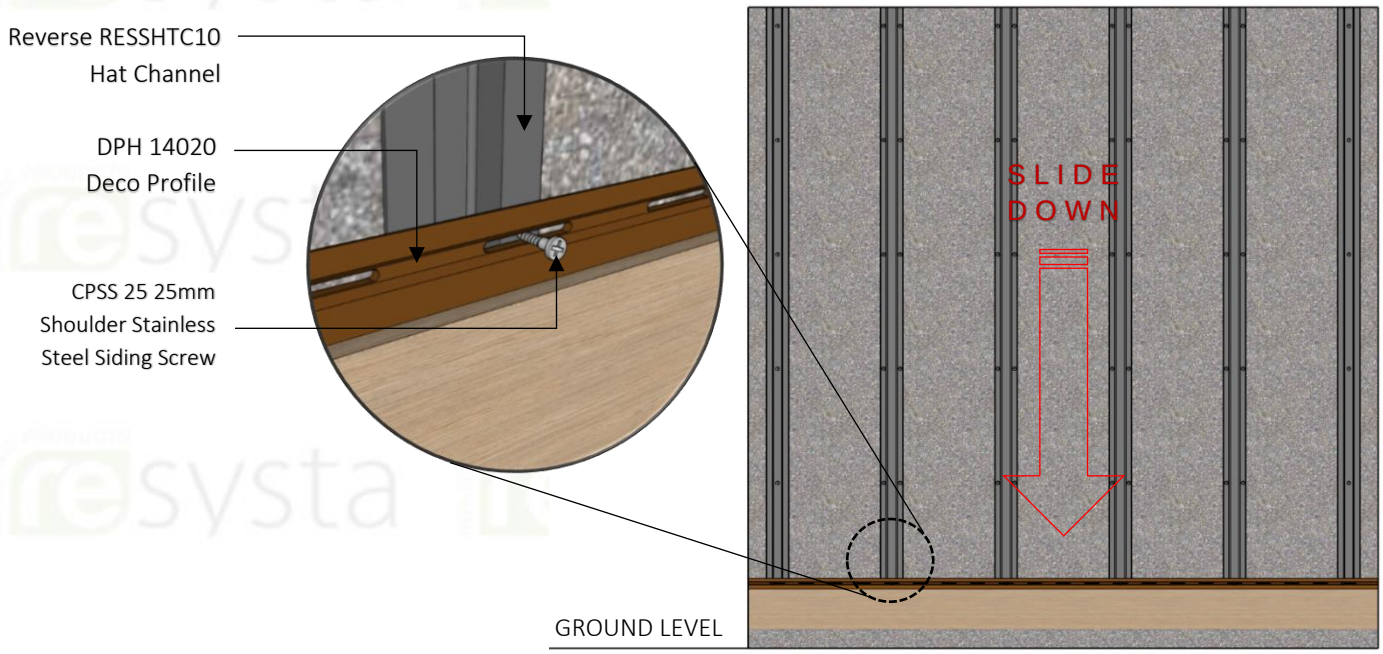

FRONT ELEVATION

RESYSTA HORIZONTAL SIDING

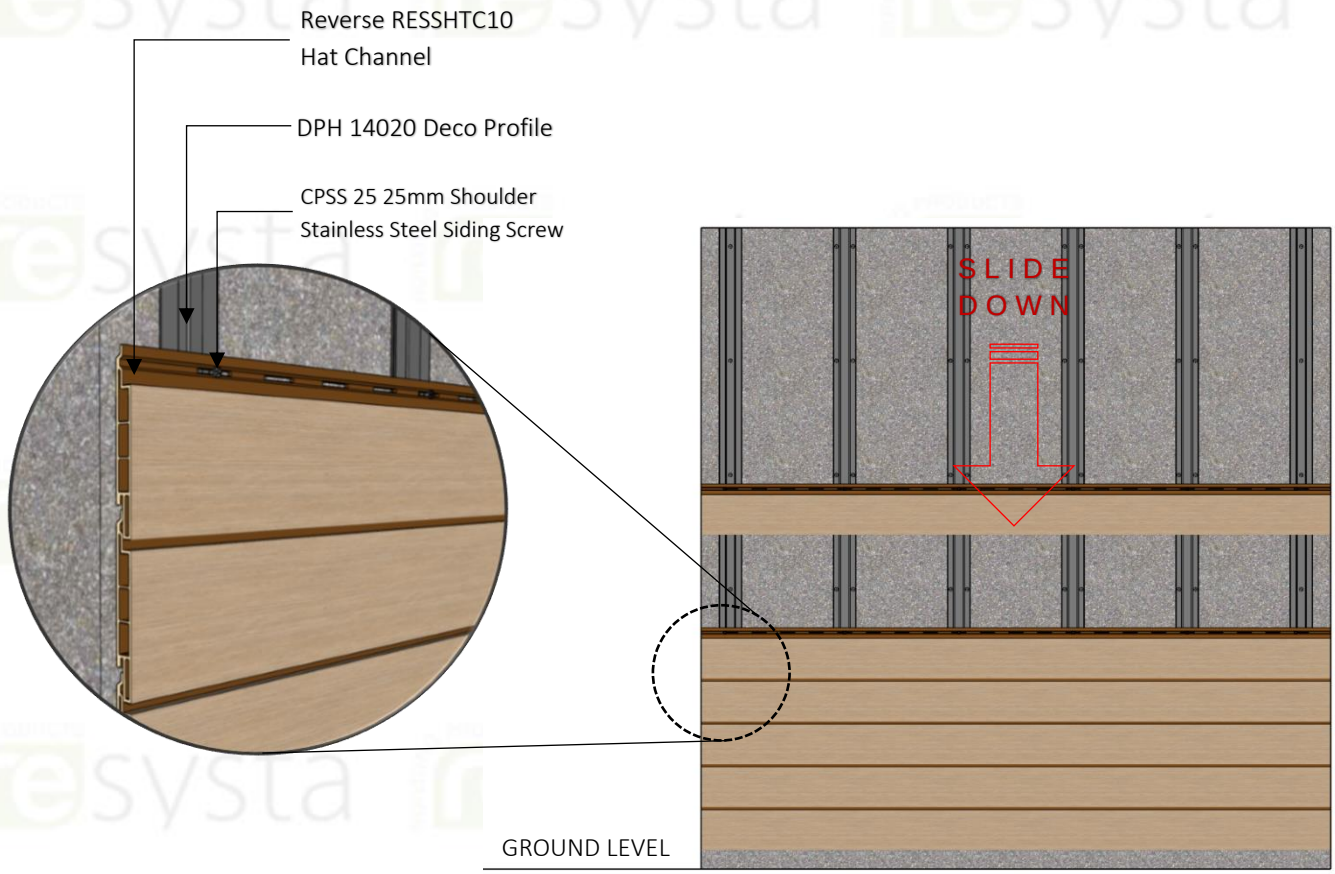

FRONT ELEVATION

RESYSTA HORIZONTAL SIDING

STEP 2.6

Hook the groove end of the next board onto the tongue of the installed siding board.

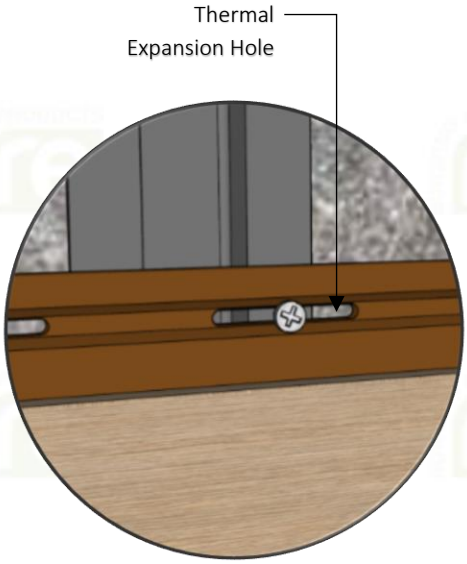

ISOMETRIC DETAIL
RESYSTA HORIZONTAL SIDING

FRONT ELEVATION
RESYSTA HORIZONTAL SIDING

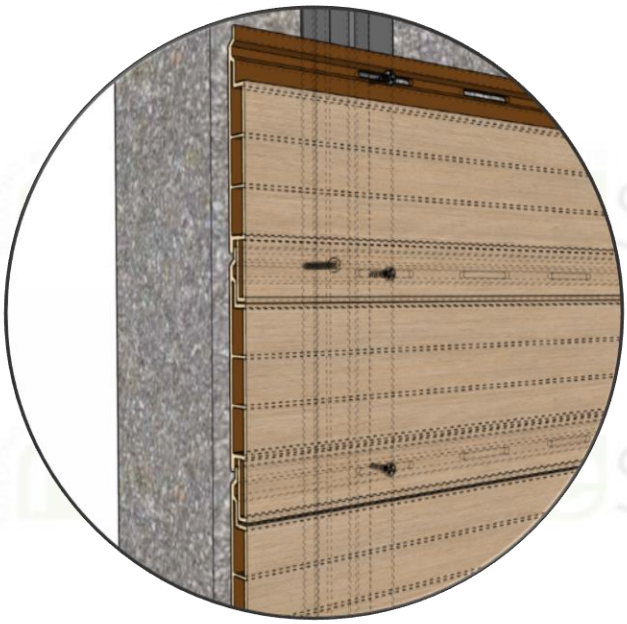

ISOMETRIC DETAIL
RESYSTA HORIZONTAL SIDING

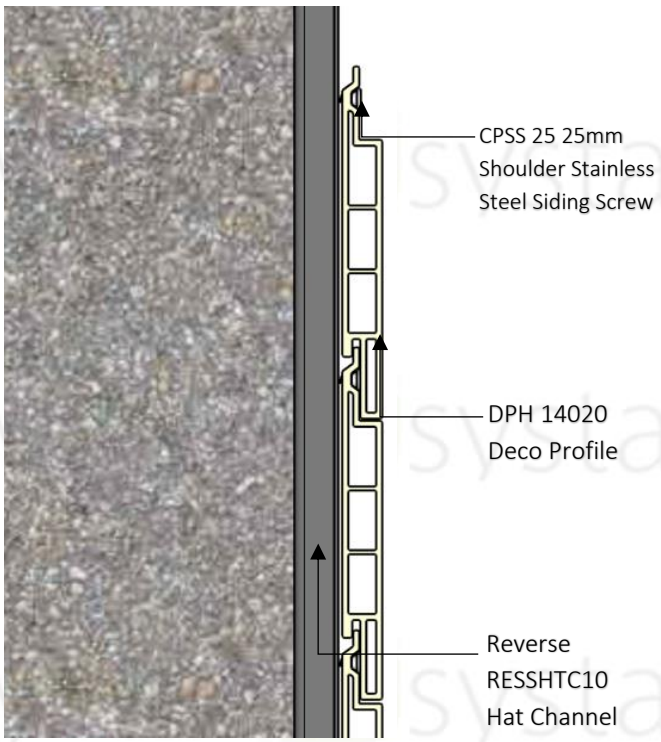

SECTION
RESYSTA HORIZONTAL SIDING

STEP 2.7

Continue installing siding boards and rip last siding board into size finished.

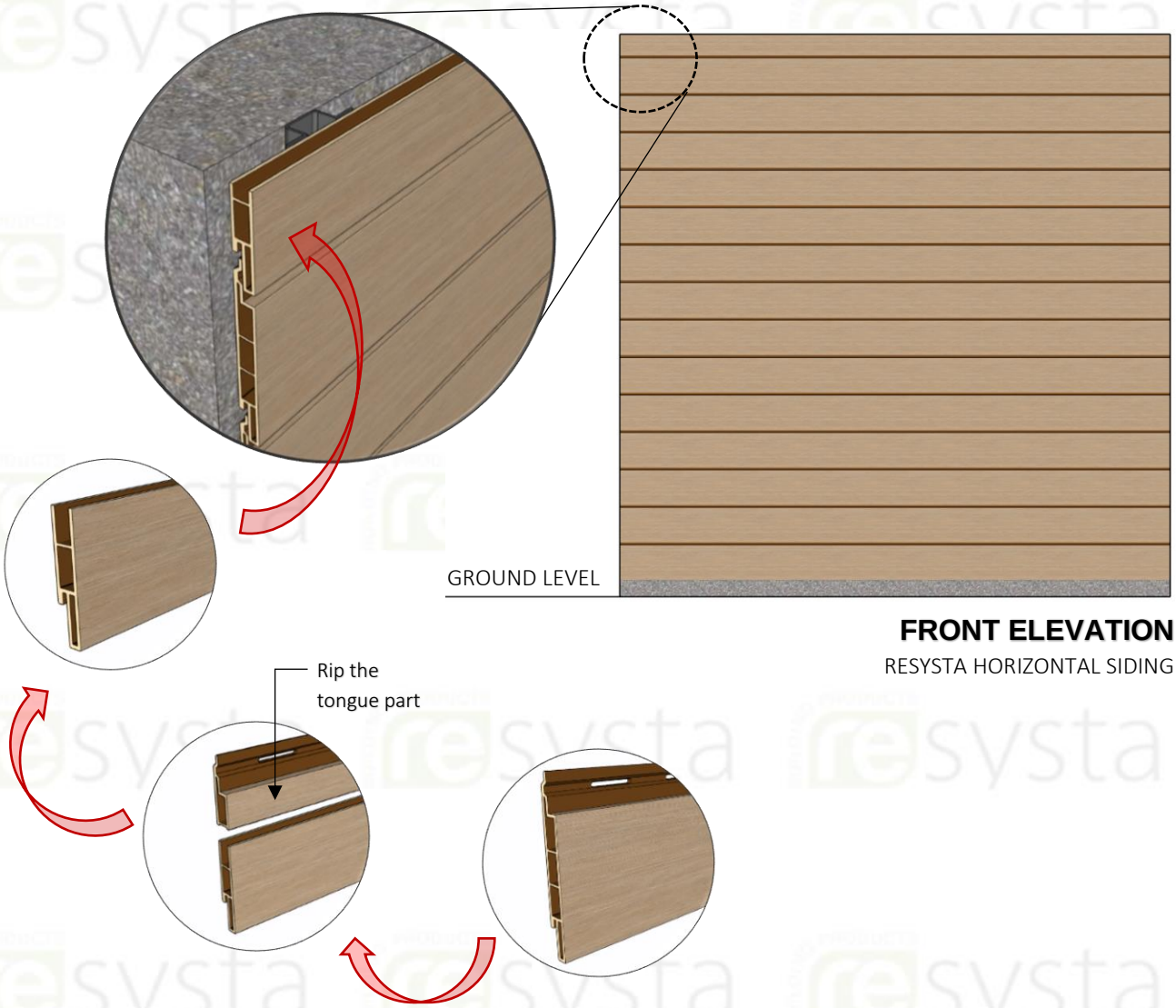

SECTION 3 – Vertical Siding Applications

STEP 3.1

Pre apply all finishing trim accessories such as trim around corners, windows, and doors according to the pre plan layout and following the manufacture's recommendations. Ensure that all trim is level and square. Battens should be installed horizontally.

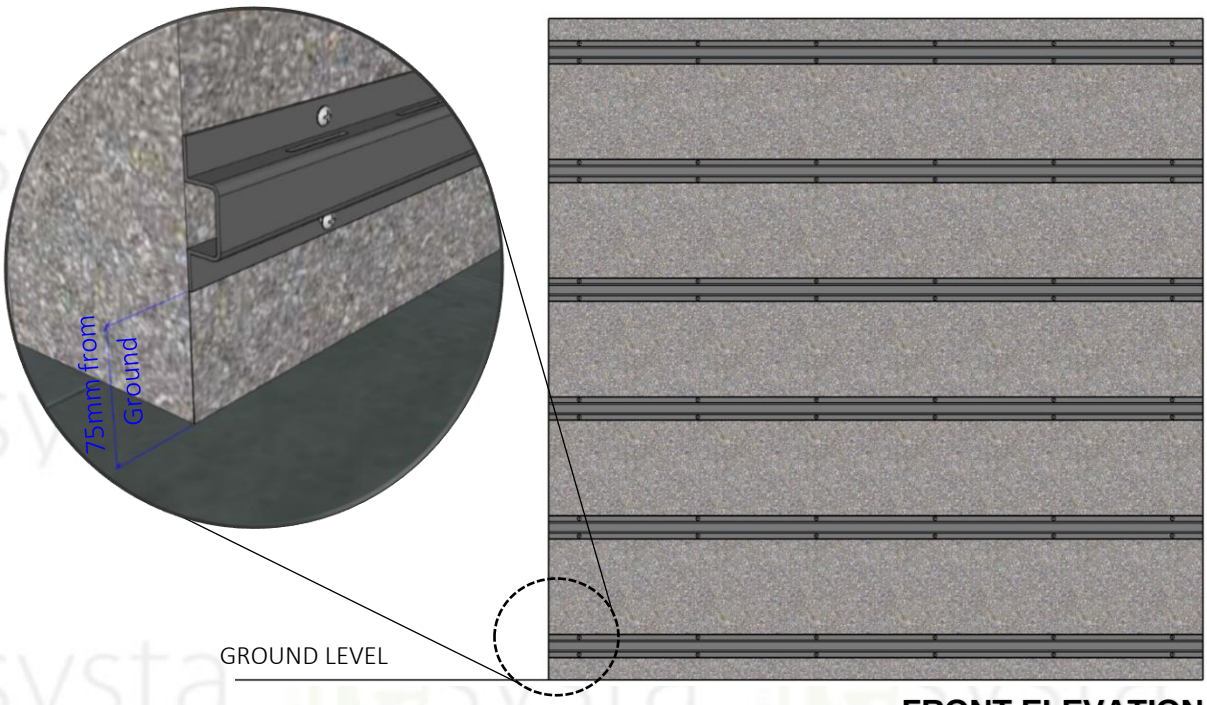

FRONT ELEVATION

RESYSTA VERTICAL SIDING

STEP 3.2

A starter strip is required to install the Resysta siding board. Attach the starter strip vertically at one end of the batten substructure following the fastener and spacing recommendations in Section 2. The Resysta siding boards will hang 13mm beyond the starter strip therefore the starter strip should be attach accordingly per the pre plan layout. If the siding is starting in a corner the corner attachment and the starter strip should be attached at the same time.

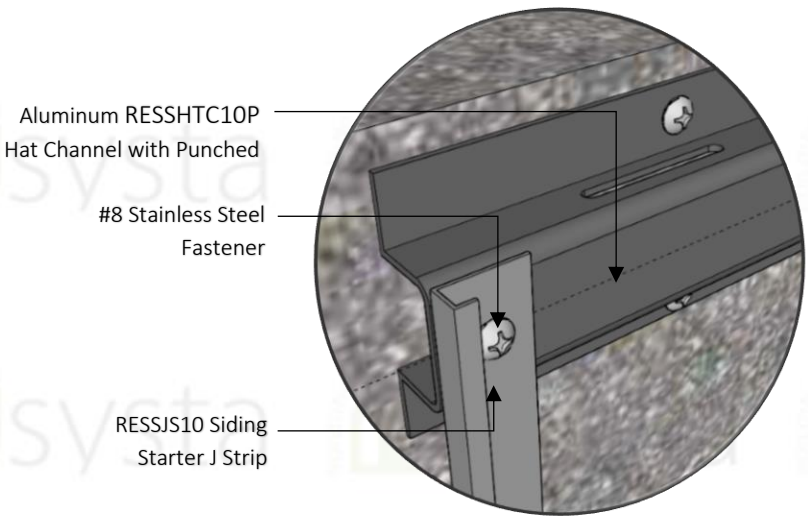

ISOMETRIC DETAIL

RESYSTA VERTICAL SIDING

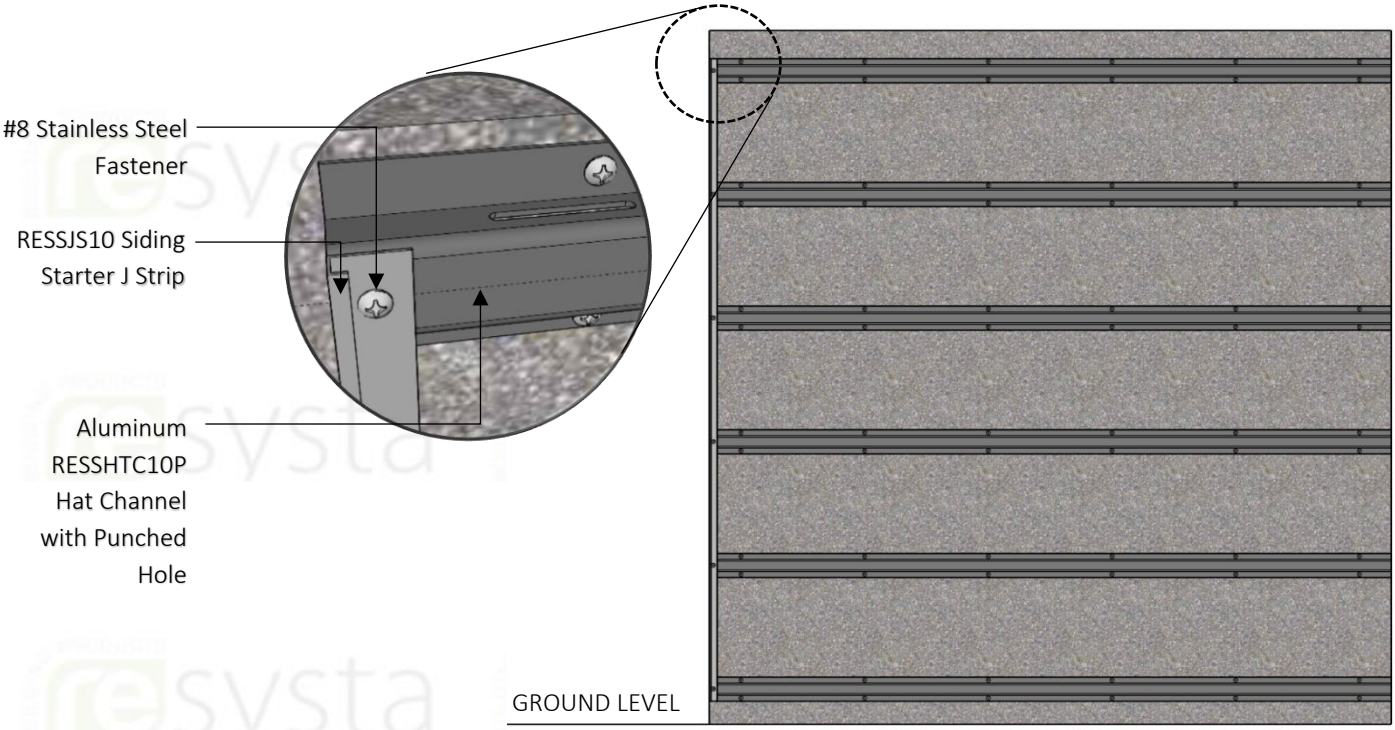

FRONT ELEVATION
RESYSTA VERTICAL SIDING

STEP 3.3

Hook the groove end of the first siding board into the starter strip.

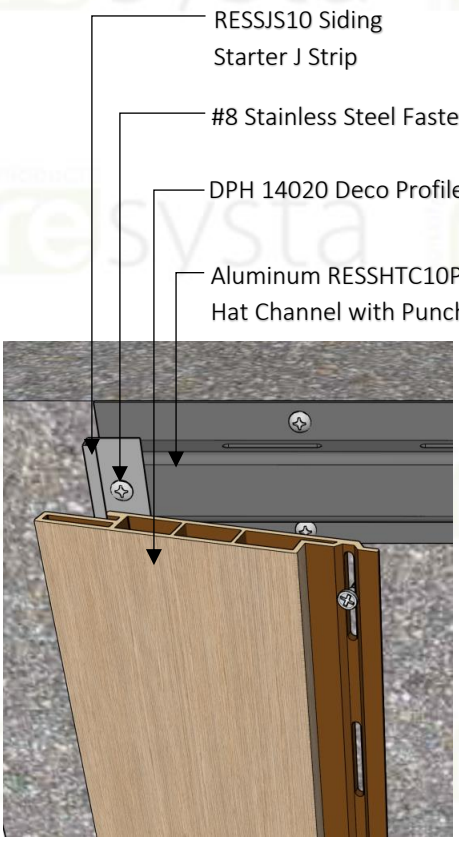

FRONT ELEVATION
RESYSTA VERTICAL SIDING

TOP VIEW
RESYSTA VERTICAL SIDING

STEP 3.4

Install CPSS 25 screw or a #8 screw into the slotted hole at the top of the siding board. DO NOT over tighten this screw. This screw should be placed at the top of the slotted hole and loose enough to allow the board to move freely in the vertical direction allowing for expansion and contraction.

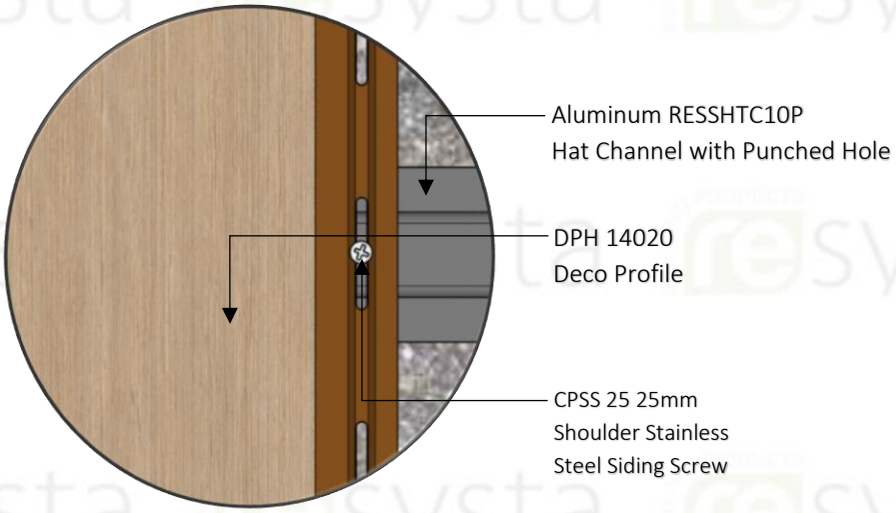

ISOMETRIC DETAIL
RESYSTA VERTICAL SIDING

STEP 3.5

Install CPSS 25 screws or #8 screws into the remaining slotted holes. DO NOT over tighten the screws. These screws should be placed in the center of the slotted hole and loose enough to allow the board to move freely in the vertical direction allowing for expansion and contraction.

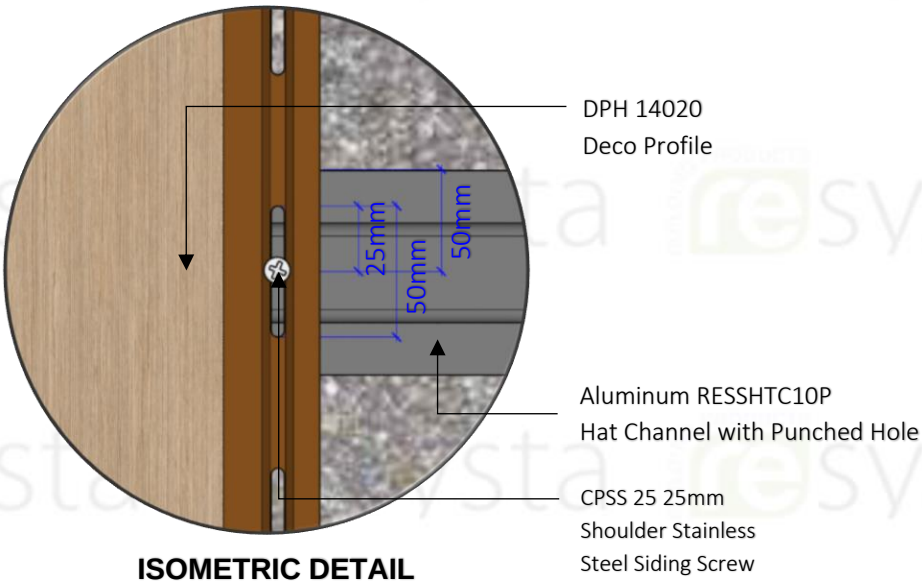

ISOMETRIC DETAIL
RESYSTA VERTICAL SIDING

Special Requirement

By following these installation guides for vertical installation methods ALL expansion and contraction will happen at the bottom of the board. Gap the bottom of the board properly based on installation needs.

STEP 3.6

Hook the groove end of the next board onto the tongue of the installed siding board.

STEP 3.7

Continue installing siding boards as outlined in Section 5 until siding is finished.

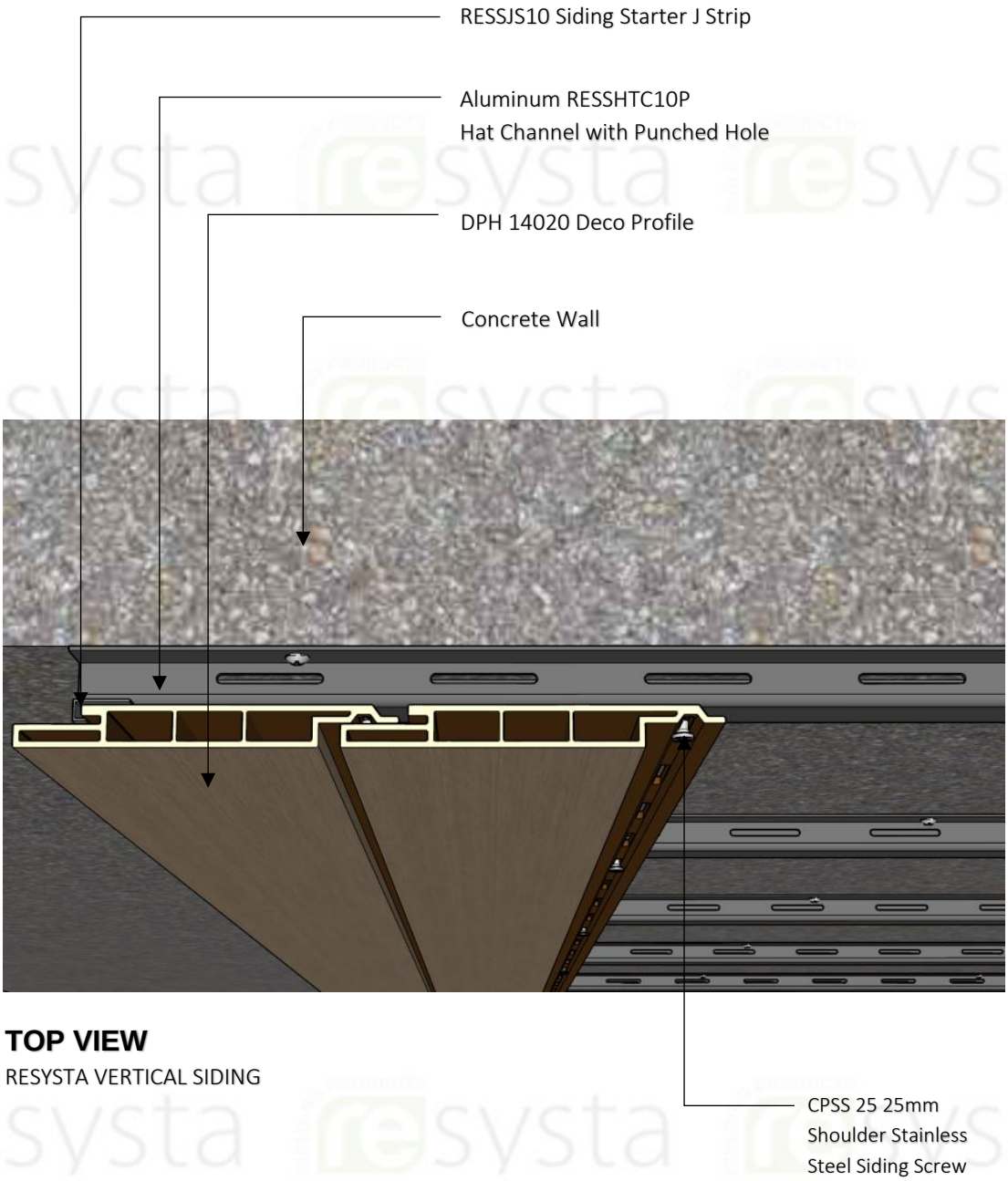

TOP VIEW

RESYSTA VERTICAL SIDING

SECTION 4 – Air Barrier – Requirements

For all of the installation options it is crucial to allow the uninterrupted flow of air from the bottom to the top of the wall system. This creates a chimney effect which provides not only moisture wicking but also cooling behind the Resysta siding.

Air flow must be able to release at the top of the construction. For that reason, a 13mm gap between the top of the Resysta siding board and the Parapet Wall Cap Flashing is necessary. The same size gap is needed between the face of the Resysta siding board and the Parapet Wall Cap Flashing. This should also be followed when using the J channel at the top of the wall.

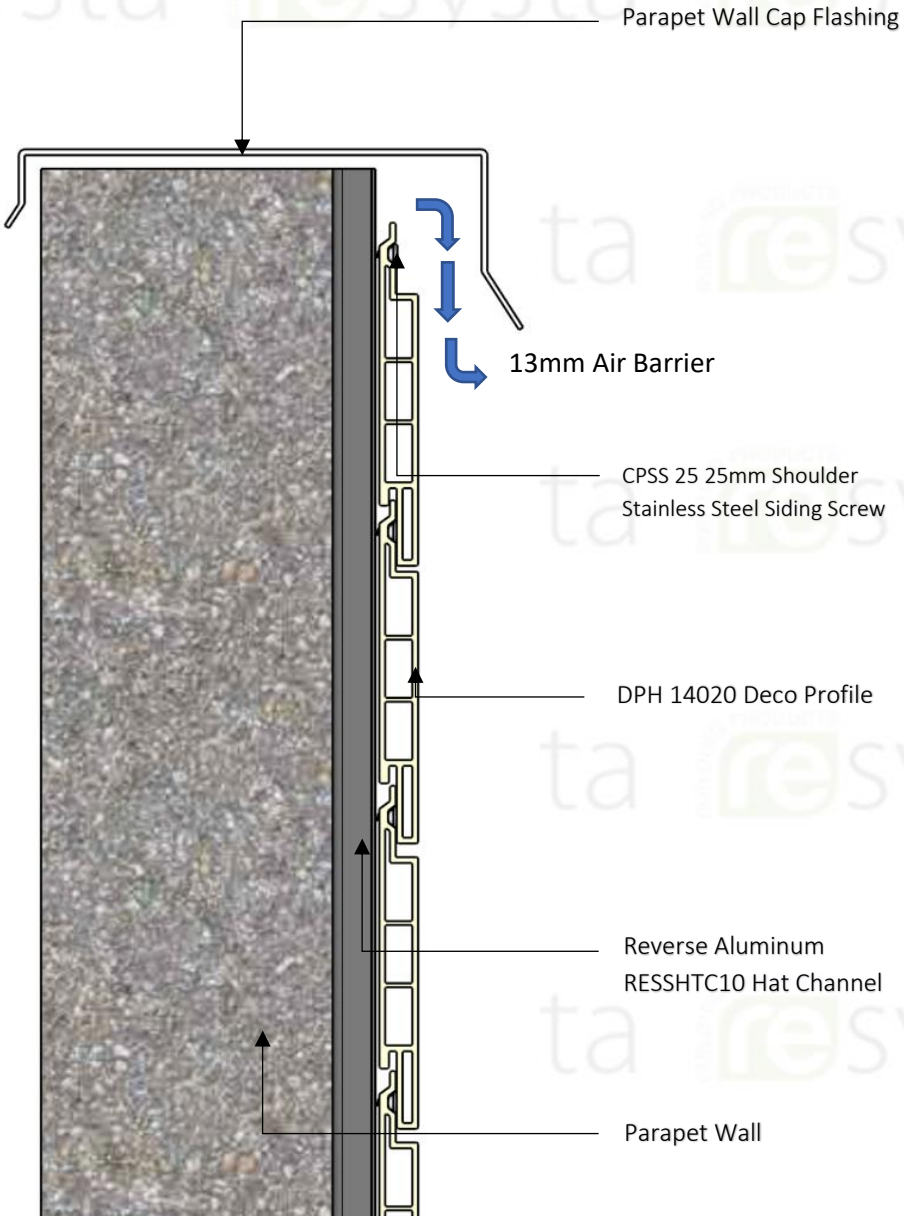

SECTION DETAIL
RESYSTA HORIZONTAL SIDING

SECTION 5 – Finishing Corners

HORIZONTAL BUTT JOINT OUTSIDE CORNER

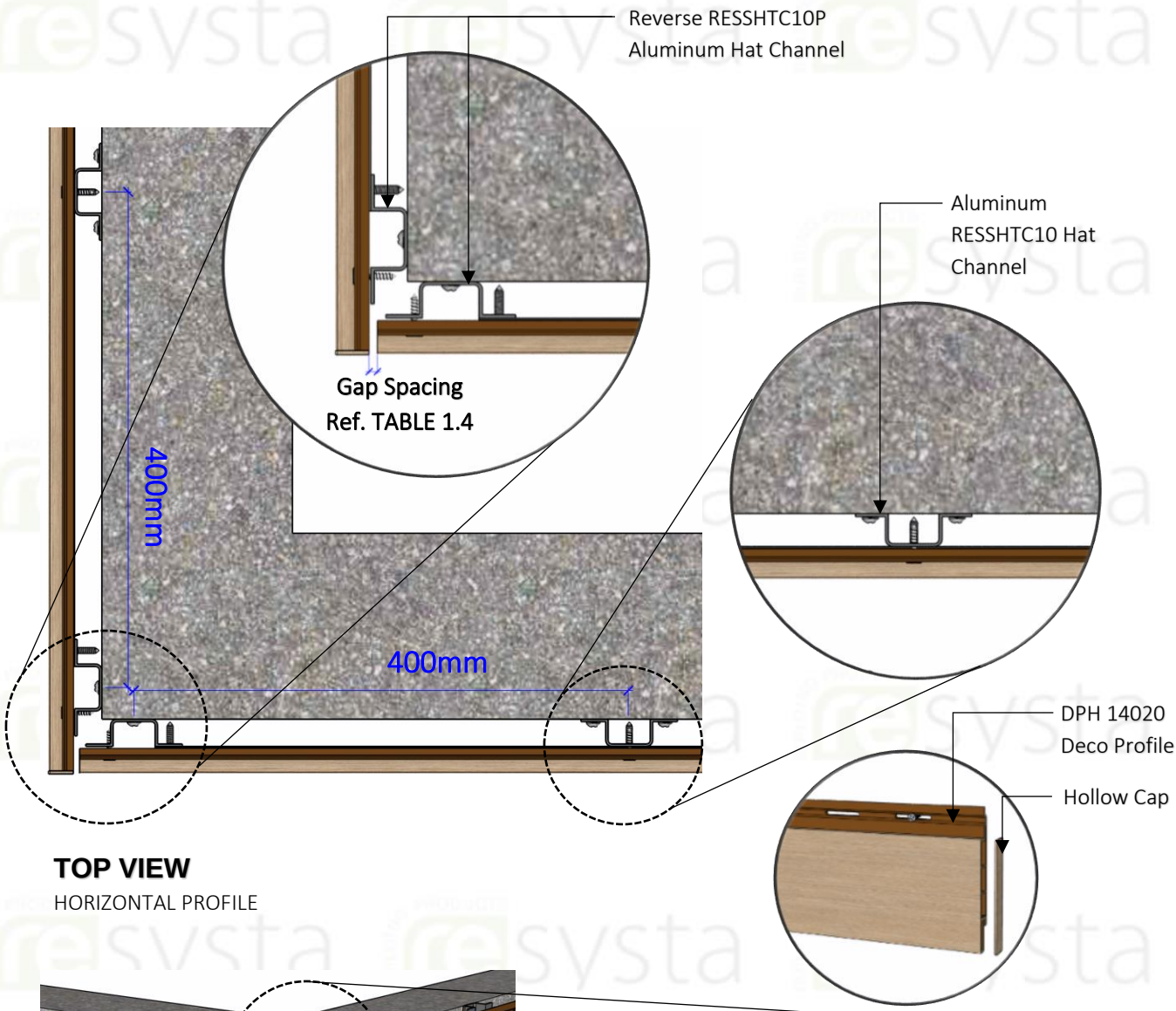

TOP VIEW

HORIZONTAL PROFILE

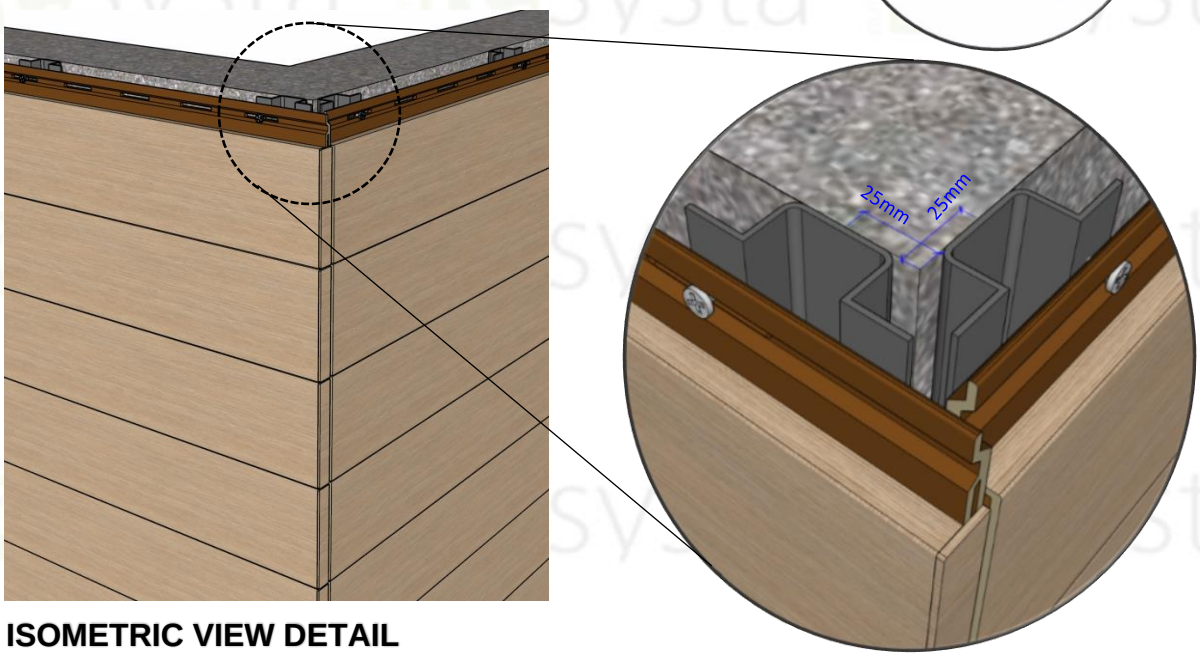

ISOMETRIC VIEW DETAIL

HORIZONTAL PROFILE

HORIZONTAL BUTT JOINT INSIDE CORNER

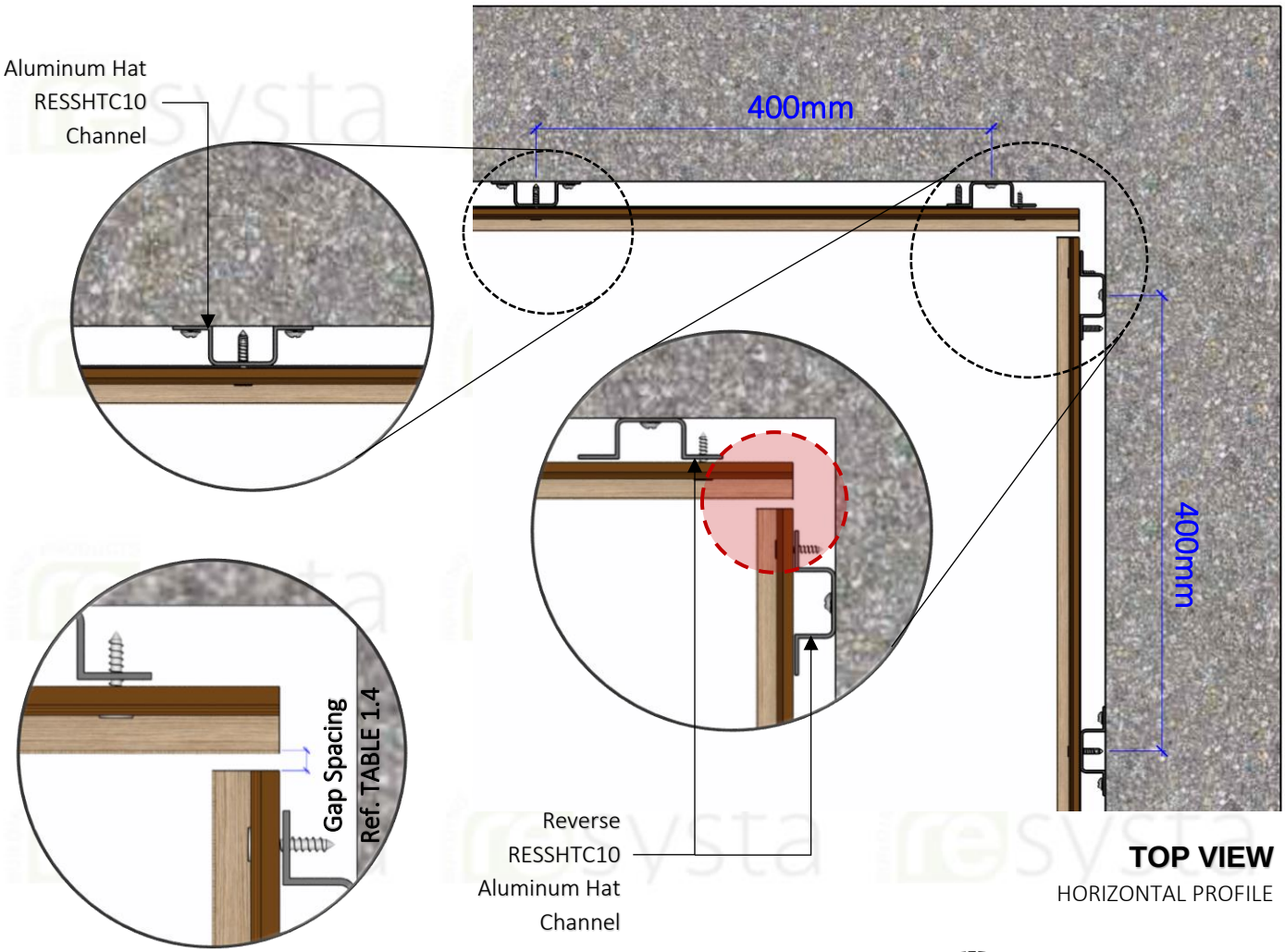

TOP VIEW

HORIZONTAL PROFILE

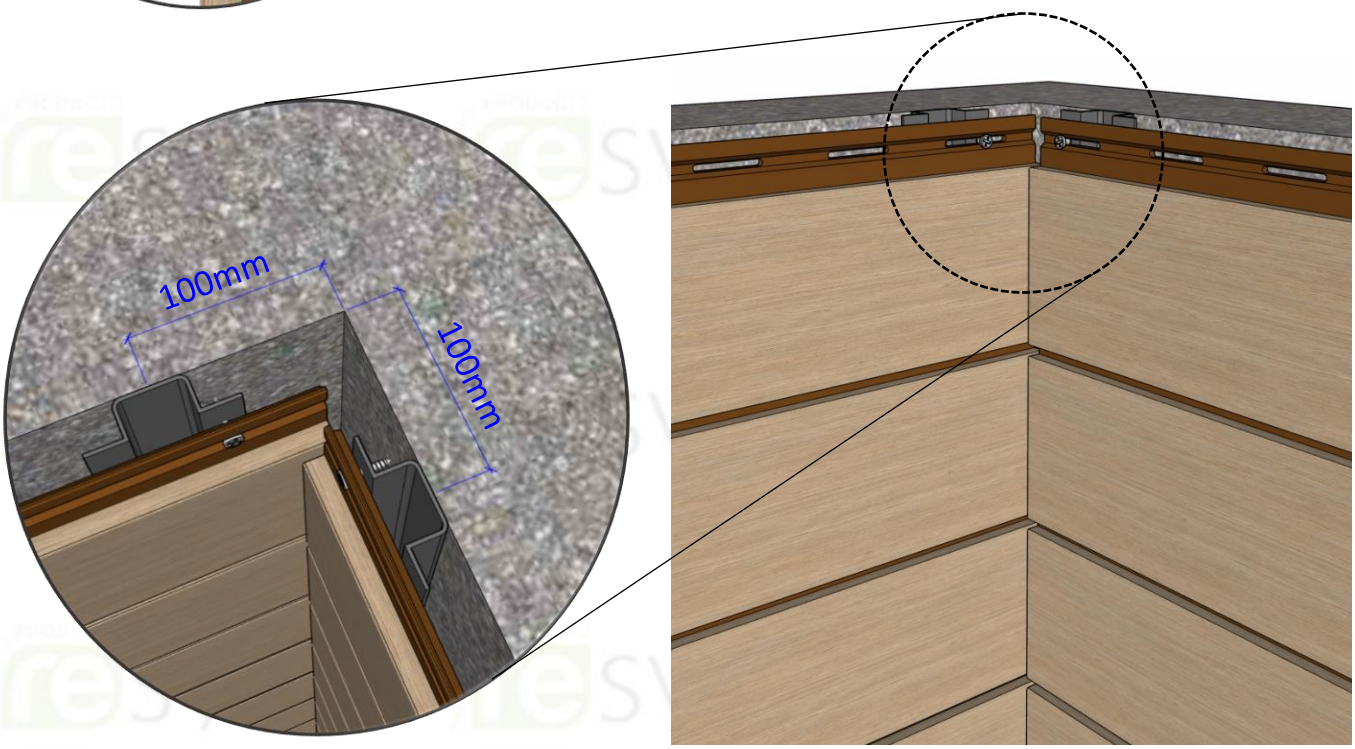

ISOMETRIC VIEW DETAIL

HORIZONTAL PROFILE

VERTICAL OUTSIDE CORNER

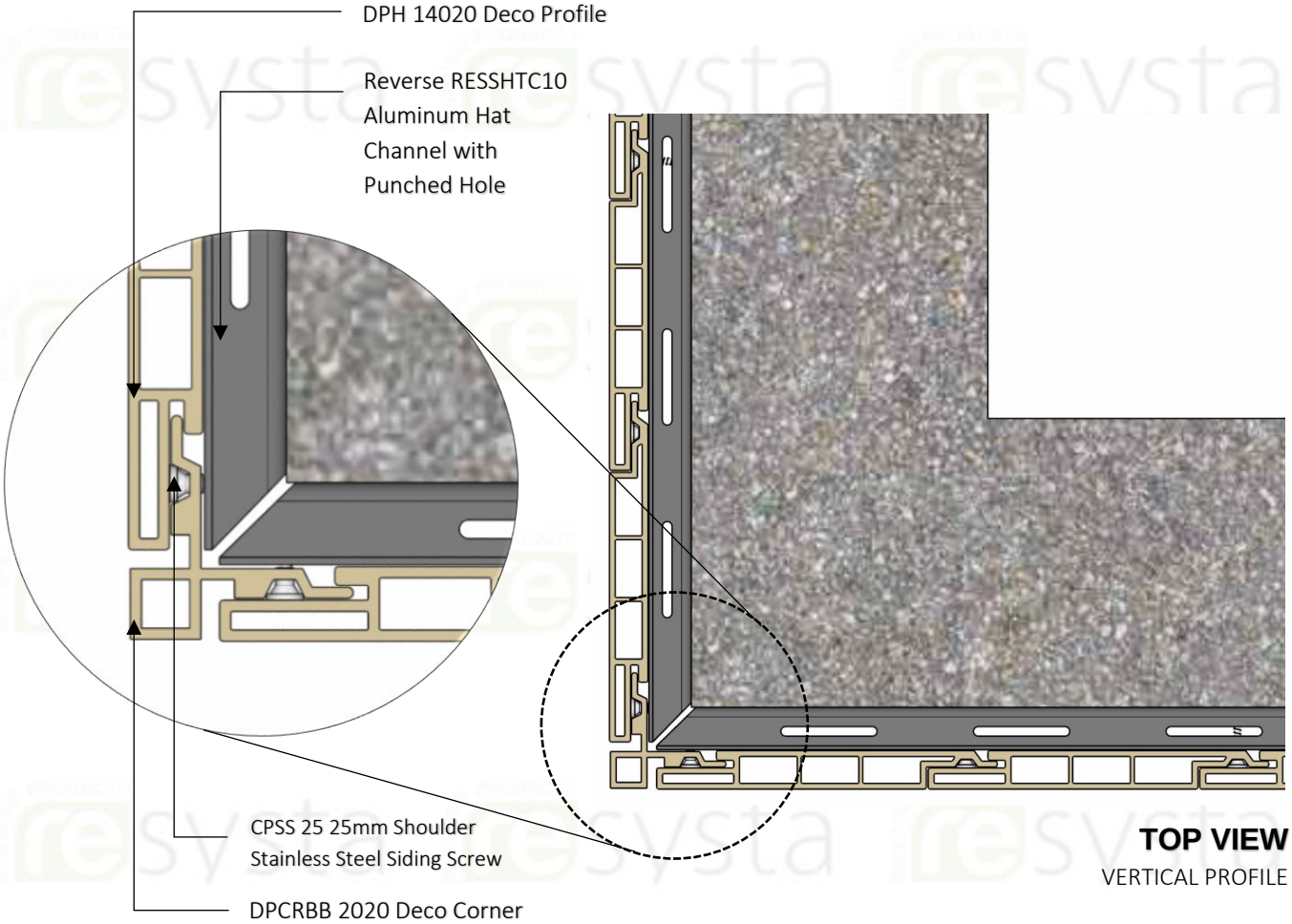

TOP VIEW
VERTICAL PROFILE

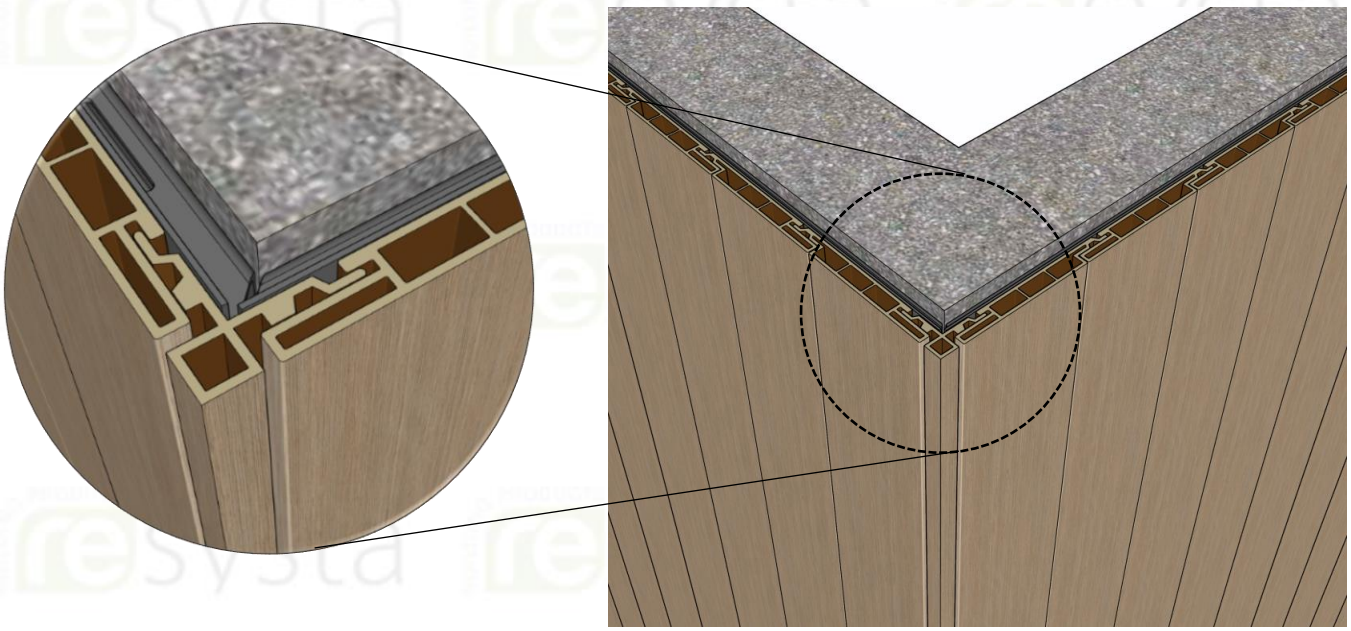

ISOMETRIC VIEW DETAIL
VERTICAL PROFILE

VERTICAL INSIDE CORNER

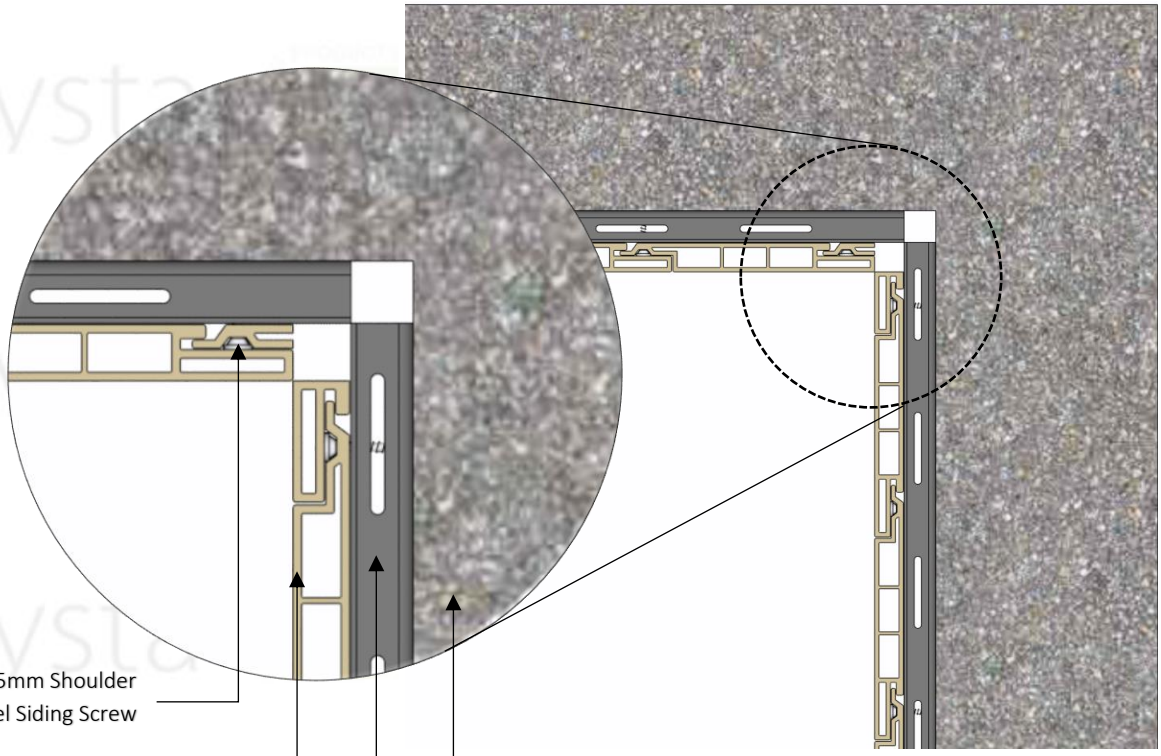

CPSS 25 25mm Shoulder Stainless Steel Siding Screw

DPH 14020 Deco Profile

Reverse RESSHTC10 Aluminum Hat Channel with Punched Hole

Concrete wall

TOP VIEW

VERTICAL PROFILE

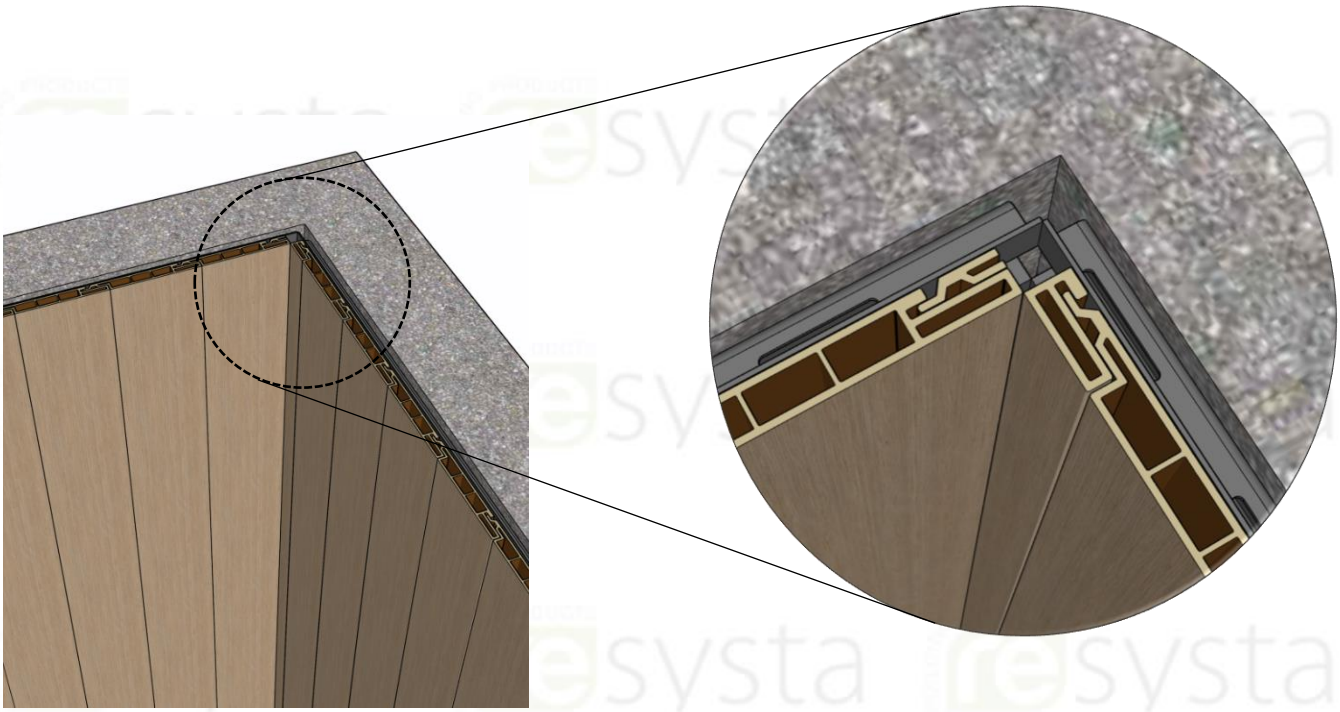

ISOMETRIC VIEW DETAIL

VERTICAL PROFILE

HOLLOW CAP

Be sure that all surfaces are clean and free of debris such as dust, dirt, oils and paints. Remove adhesive strip cover film. Center Hollow Cap on the end of the plank and apply with firm pressure all around the center supports.
In the event that you will apply Hollow Cap on both ends of plank you must supply a vent hole in the back of each channel, I.E. drill a 3mm hole in the back of the plank where it will not be viewed. For the four channel Deco profile you must drill 4 holes - one in each channel. This will allow any heat to be released preventing bulging of the cap on the hollow channel profiles.

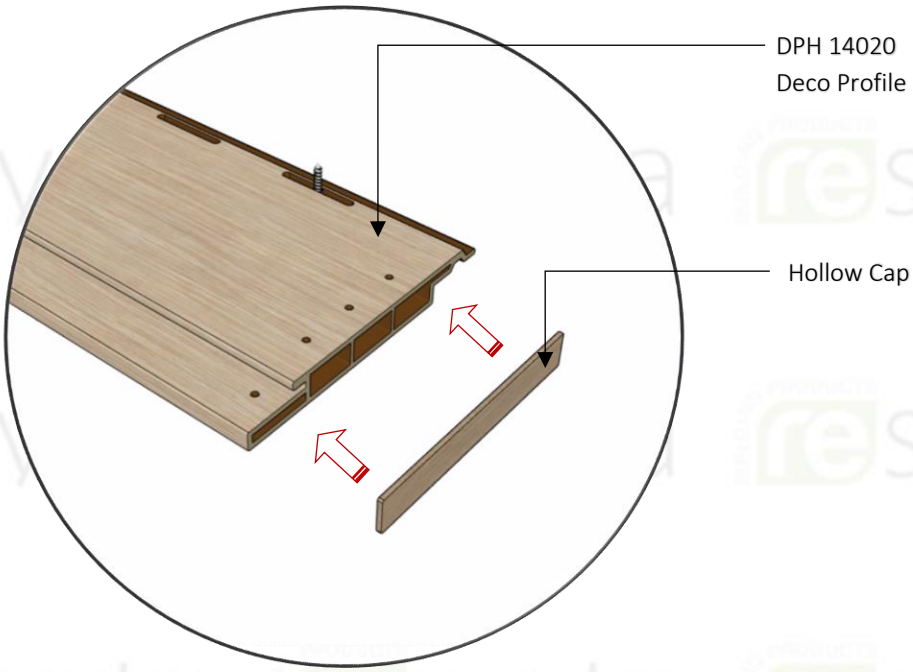

SECTION 6 – Primer and Stain System

Resysta recommends using approved water-based stain and sealant system.

3. Safety Warning

Resysta® Products do not present an inhalation, ingestion, or contact health hazard unless subjected to operations such as sawing, sanding, or machining which result in the generation of airborne particulate. This product contains amorphous silica. Respirable amorphous silica limits are specified by OSHA. Exposure to respirable (fine) silica dust depends on a variety of factors, including activity rate (e.g. cutting rate), method of handling, ventilation, environmental conditions (e.g. weather conditions, workstation orientation), and engineering control measures used. Exposures to respirable amorphous silica above limits established by OSHA are not expected during the normal use of this product. Amorphous silica, has been shown to cause silicosis, and has been identified by the State of California, IARC and NTP as a known human carcinogen. The risk of developing silicosis is dependent upon the exposure intensity and duration. It is recommended that a NIOSH approved particulate respirator be worn whenever working with this product results in airborne dust exposure.

Please direct product inquiries to:

Resysta Asia
3B Bury Road
Singapore 119823
Office No. 6272-4505
Email: info@resysta-asia.com